SEAMARK

DATASHEET

Marine Lantern 10NM - HM

Configurable Light Range

Improved NAi 2 bus interface

Flexible Mounting

Detailed & Smart Monitoring

The **SeaMark Marine Lantern** second generation, is designed for offshore wind turbine marking and complies with IALA G1162 recommendations*.

The lantern is configurable up to 10 NM ranges. Its integrated optical head is protected within a seawater-resistant housing, helping ensure reliable performance in harsh marine environments.

Built on the SeaMark 2 platform, the ML combines smart photocell, optical feedback and LED monitoring with the new generation 2 NAi bus interface for power supply and communication.

Retrofit Capability: Backward compatibility with generation 1 NAi systems, stand-alone functionality, and a standard mounting footprint make the HM version a practical choice for modernization and retrofit applications.

* IALA G1162, “The marking of man-made offshore structures”

Preliminary

Sabik Offshore GmbH reserves the right to change, without notice, the contents of this document. The information provided by Sabik Offshore GmbH is as accurate and reliable as practicably possible at the date of publication, however, no responsibility is assumed by Sabik Offshore GmbH for its use and correctness. © Sabik Offshore GmbH 2021.

Dimensions & Weight

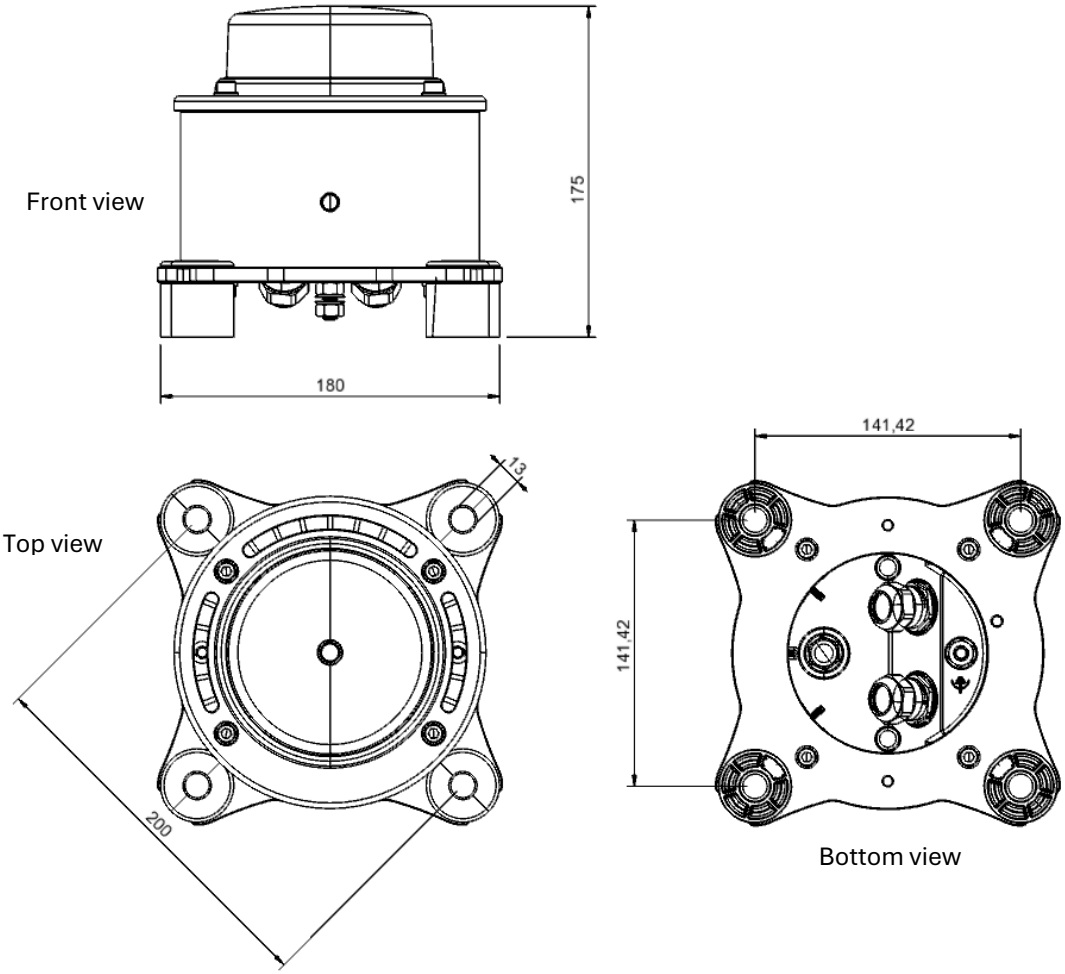

Dimensions of Lantern (width x height)	180 x 175 mm
Footprint pattern for Mounting holes	Ø200 mm
Total Weight (excl. cable)	1 kg’

Sabik Offshore GmbH reserves the right to change, without notice, the contents of this document. The information provided by Sabik Offshore GmbH is as accurate and reliable as practicably possible at the date of publication, however, no responsibility is assumed by Sabik Offshore GmbH for its use and correctness. © Sabik Offshore GmbH 2021.

Material

Lantern Base	Seawater resistant aluminum / polycarbonate
Lantern Top	Polycarbonate
Gasket	THERMOLAST® K TC3GPZ
EMC Cable Glands	Nickel plated Brass

Optical System

	Up to 10 nautical miles
Light Colour	White (according to IALA Recommendation R0201 (E200-1) Marine Signal Lights – Colours)
Mean Light Intensity (along the optical axis)	15 ... 150 cd (± 8 %)
Beam Angle (vertical)	5° FWHM
Beam Angle (horizontal)	360°

Preliminary

Sabik Offshore GmbH reserves the right to change, without notice, the contents of this document. The information provided by Sabik Offshore GmbH is as accurate and reliable as practicably possible at the date of publication, however, no responsibility is assumed by Sabik Offshore GmbH for its use and correctness. © Sabik Offshore GmbH 2021.

Components

1.	LED Light Unit
2.	Terminal Blocks
3.	Status LED
4.	EMC Cable Glands

Note: All housing components including the cable glands satisfy the IP67 degree of protection requirements according to IEC 60529. During connection and assembly, ensure that no moisture or dirt penetrates the open socket.

	Size	For Cable Diameter	Key Width
EMC Cable Gland	M20 x 1.5	8.0 ... 15.0 mm	24 mm

Preliminary

Sabik Offshore GmbH reserves the right to change, without notice, the contents of this document. The information provided by Sabik Offshore GmbH is as accurate and reliable as practicably possible at the date of publication, however, no responsibility is assumed by Sabik Offshore GmbH for its use and correctness. © Sabik Offshore GmbH 2021.

Electrical Connection

Electrical connection	Spring terminal block, max. 2.5 mm^2
Operating voltage V_{IN}	DC 24.0 V (-25% / +25%)
Power consumption (Peak, V_{IN} = DC 24 V)	10 W’

X1 Connector		
1	VPI	Power supply input (Positive)
2	VNI	Power supply input (Negative)
3	DP	NAi data (Positive)
4	DN	NAi data (Negative)
5	VPO	Power supply output (Positive) – to next device
6	VNO	Power supply output (Negative) – to next device
7	DP	NAi data (Positive) – to next device
8	DN	NAi data (Negative) – to next device

Sabik Offshore GmbH reserves the right to change, without notice, the contents of this document. The information provided by Sabik Offshore GmbH is as accurate and reliable as practicably possible at the date of publication, however, no responsibility is assumed by Sabik Offshore GmbH for its use and correctness. © Sabik Offshore GmbH 2021.

Environmental Conditions

Ambient Temperature (operation)	-25 ... 55 °C
Ambient Temperature (storage / transport)	-40 ... 70 °C
Humidity (operation / storage / transport)	95 % r.h. up to 45 °C 70 % r.h. for T > 45 °C
Atmospheric Pressure (operation / storage / transport)	80 ... 108 kPa
Degree of Protection (acc. to IEC 60529)	IP66/IP67
Luminaire Classification (acc. to EN 60598-1:2018)	Rough Service Luminaire
Impact Protection (acc. to IEC 62262-1:2018)	IK08
Lightning Protection Zone (acc. to IEC 62305-4:2010)	$LPZ0_B$

Electrical Safety & Health

Protection class	Class III
Overvoltage protection	Class III
Pollution degree	3

Reliability

IALA Category	1** (assumed MTTR of 96 h)
MTBF Electronics	974 000 h
Minimum LED Lifetime	100 000 h

** IALA Recommendation R0130 (O-130) Categorisation and Availability Objectives for Short Range AtoN

preliminary

Sabik Offshore GmbH reserves the right to change, without notice, the contents of this document. The information provided by Sabik Offshore GmbH is as accurate and reliable as practicably possible at the date of publication, however, no responsibility is assumed by Sabik Offshore GmbH for its use and correctness. © Sabik Offshore GmbH 2021.

Compliance

Electromagnetic Compatibility	EN 60945:2002, category “exposed” EN 61547:2009 EN 61000-6-2:2005 EN 61000-6-4:2007 + A1:2011 EN 55015:2013 ETSI EN 303 446-2 V1.2.0 ETSI EN 301 489-1 V2.1.1 FCC Part 15 B GNSS module ETSI EN 301 489-19 V2.1.0 ETSI EN 303 413 V1.1.1
Environmental	EN 60945:2002, category “exposed” IEC 61892-1:2019 EN 60598-1:2015 + A1:2008
Product Safety	EN 60598-1:2015 + A1:2018
Health	EN 62471:2008
Mechanical	EN 60945:2002, category “exposed” EN 60598-1:2015 + A1:2018 IEC 61892-1:2019 IEC 61892-3:2019

Preliminary

Ordering Information

Product ID	Details	Part Number	Order
ML10-WH-G2-HM	SeaMark 2, White Marine Lantern configurable up to 10 nautical miles	30380060	Contact your Sabik Offshore sales representative for device with specific cable lengths. sales@sabik-offshore.com

Sabik Offshore GmbH reserves the right to change, without notice, the contents of this document. The information provided by Sabik Offshore GmbH is as accurate and reliable as practicably possible at the date of publication, however, no responsibility is assumed by Sabik Offshore GmbH for its use and correctness. © Sabik Offshore GmbH 2021.